GSX-R 1100 - (1987 - 1988)

Product Compatibility

- vSystem
- xSystem
- eSystem
- Traveller Expansion Bag
- Scorpion Dual Injector

- Magnum HCR

We are always looking for photos of your installation to improve our guides, if you would like to share the setup on your bike please send your installation pics to technical@scottoiler.com.

---

1. Go to vSystem Installation
2. Go to xSystem Installation
3. Go to eSystem Installation

---

vSystem Installation

Step 1 - Find a vacuum source

The first step is to find the vacuum connection on your bike. This could be an already existing and blanked off vacuum spigot, a vacuum blanking screw, a vacuum operated fuel tap or a balancing pipe between your cylinders. Motorbikes after 2016 also have an EVAP System to control the emissions. This is operated by the engine vacuum and you can connect into the vacuum line between the throttle bodies and purge valve. Once you have identified your vacuum source connect it with the vacuum damper elbow and black vacuum line to your Scottoiler.

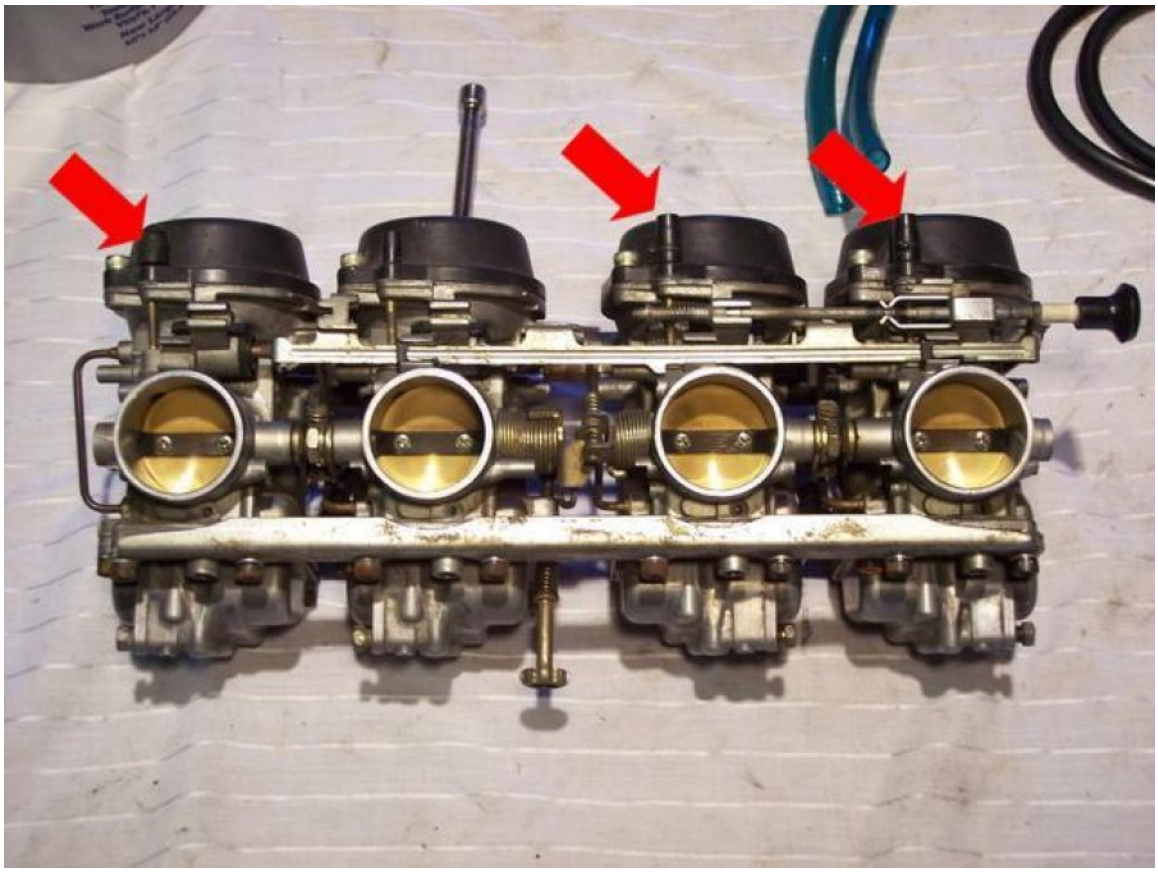

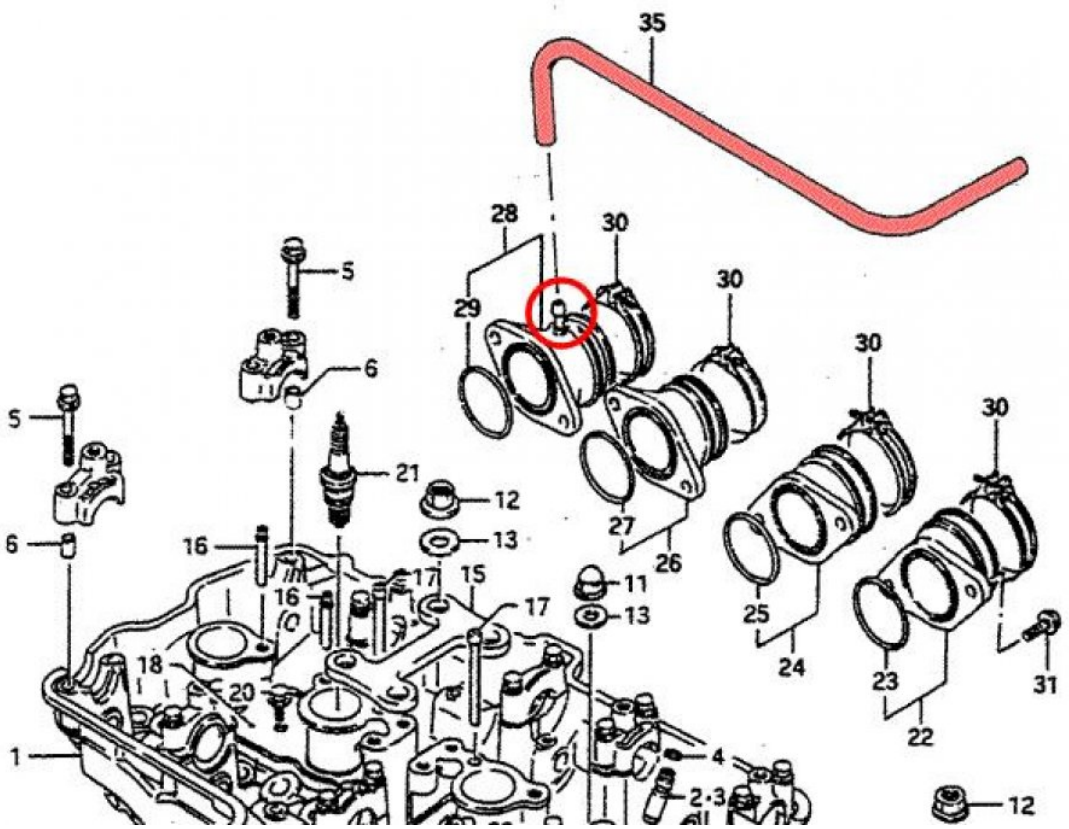

Step 2 - Find a place for the reservoir

The reservoir can be mounted under the seat or on a frame spar. Ensure that the top of the reservoir is at least slightly raised (ideally above 15° from horizontal) to maximise the available range.

Step 3 - Mount the dispenser and connect the system

The multiform dispenser block can be manipulated and cut to fit most swing arms. Assemble the dispenser unit as per instructions. Identify the exact location before taking of the adhesive. Match up the adjustment of your chain with the adjustment of the multiform block to allow for forward/backward adjustment in line with your chain variance.

Before taking off the adhesive thoroughly clean the area and then wipe it down with the included IPA Alcohol Wipes to remove any residue.

Alternatively you can use the micro dispenser plate by itself on any other mounting point on your rear swing arm / sprocket location such as bobbin

mounts or toe guards.

The delivery tubing can be routed along the swing arm using self- adhesive cable clips. For further information see our easy step installation guide - Dispenser Positioning.

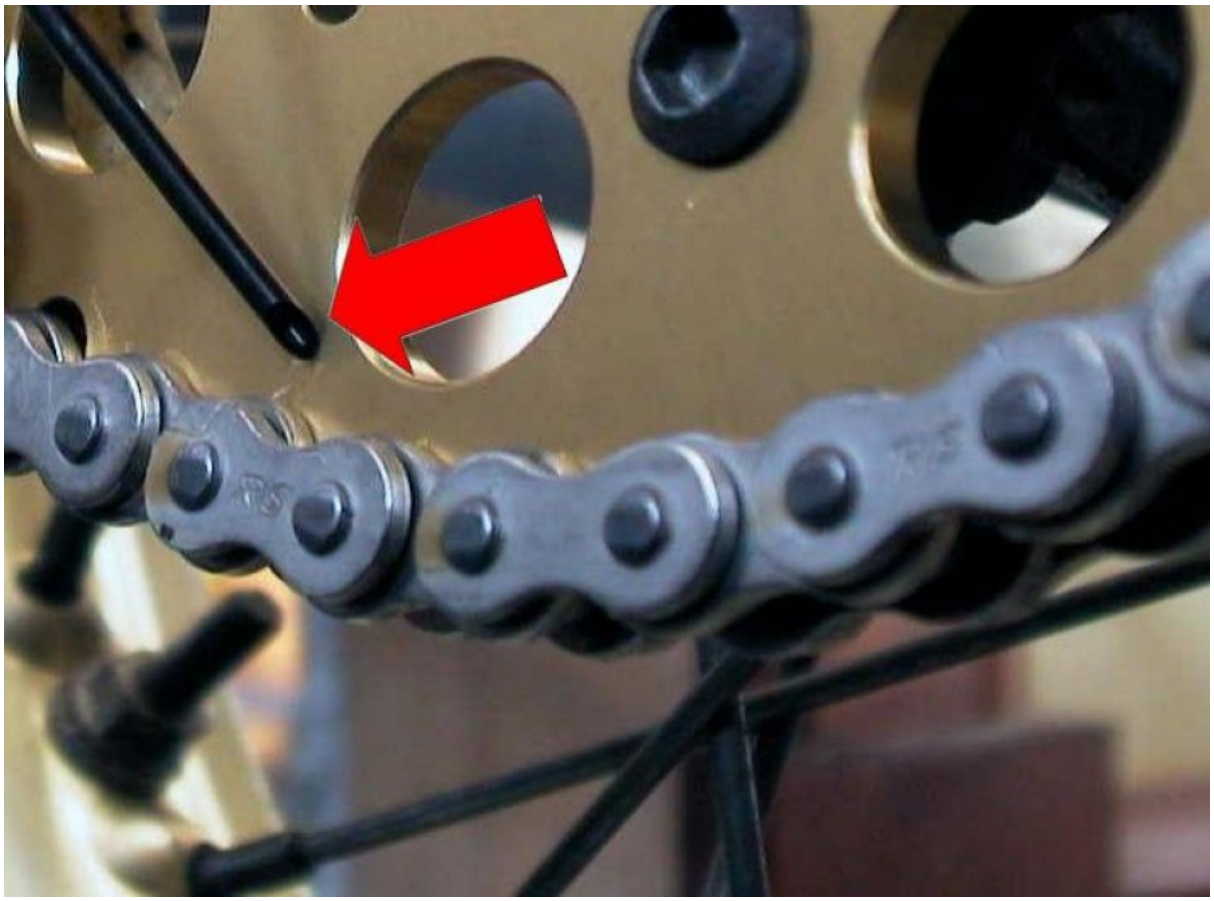

Step 4 - Fill, prime and set up your vSystem

Once fitted, fill and prime the system and set the adjuster knob to 'prime'. Start the engine and turn the adjuster knob until a flow of between 1 and 2 drops per minute is achieved. Check the condition of your chain after a ride, and then adjust as required.

For best results clean your chain before fitting the Scottoiler using paraffin or similar. Then lightly oil the chain from the bottle using a rag or a brush, this allows the oil from the Scottoiler to reach both sides of the chain. 1 to 2 drops per minute will maintain this film of oil on the chain.

---

xSystem Installation

General xSystem guide

The xSystem chain oiler is really easy to install and can be mounted on your bike is less than 1 hour. The installation consists of three simple steps:

- Find a place for the reservoir, either on the frame or under the seat
- Connect the reservoir to your battery
- Route the dispenser to your rear sprocket

For an example of the installation see our xSystem Installation Guide.

If you have our System installed on this specific motorcycle model, we would appreciate if you could send us pictures. With more pictures we can make the installation even easier for all motorcyclists. Please send us your feedback and photos to technical@scottoiler.com.

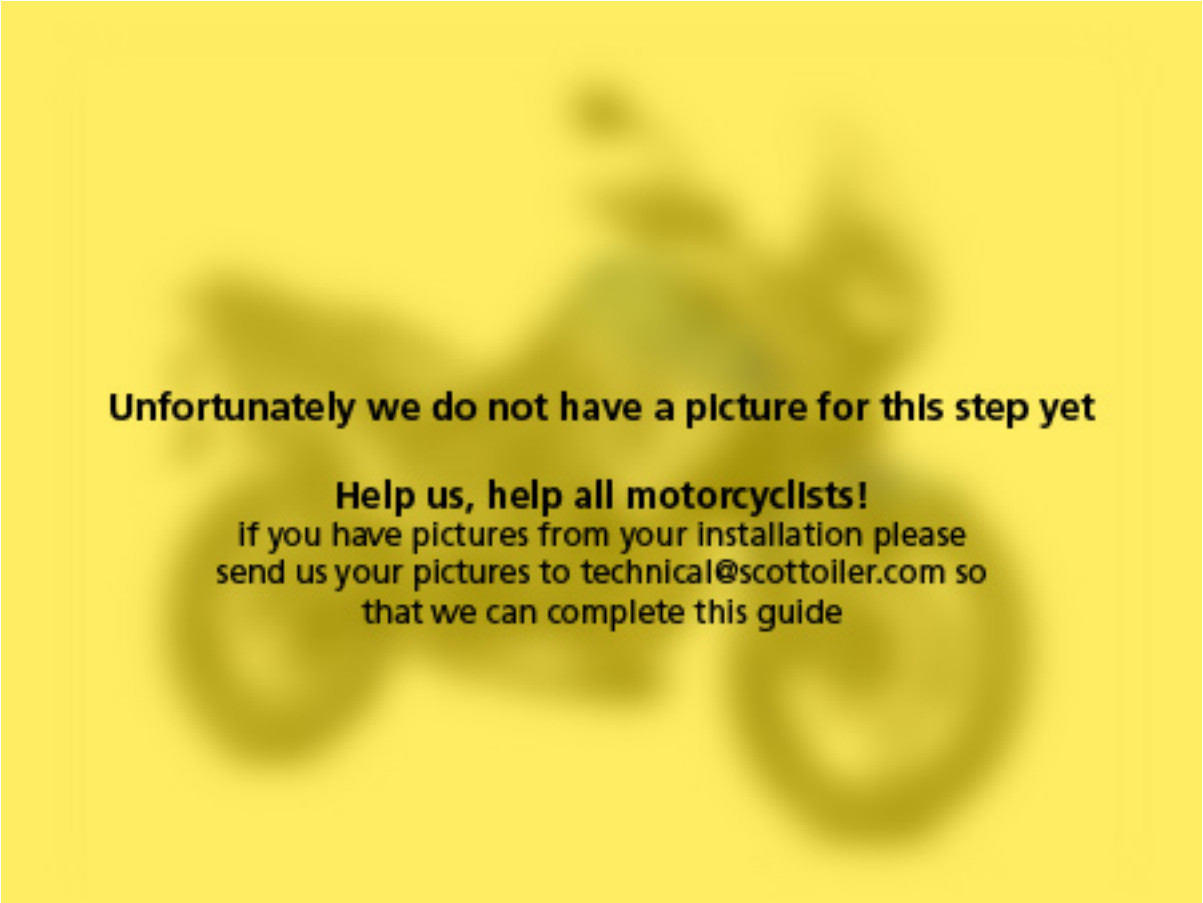

eSystem Installation

General eSystem guide

The eSystem chain oiler is really easy to install and can be mounted on your bike in less than 1 hour. The installation consists of the three simple steps:

- Mount the display on your handlebars
- Connect the display and reservoir to your battery
- Attach the dispenser and route the delivery tubing to the reservoir

For an example of the installation see our eSystem Installation guide.

If you have our system installed on this specific motorcycle model, we would appreciate if you could send us pictures. With more pictures we can make the Installation even easier for all motorcyclists. Please send us your feedback and photos to technical@scottoiler.com.

Online URL:
https://marketingengineer.de/article/gsx-r-1100-1987-1988-255.html