X-ADV (2017 - on)



Product Compatibility

- vSystem
- xSystem
- eSystem
- Scorpion Dual Injector
- Traveller Expansion Bag

- Magnum HCR

We are always looking for photos of your installation to improve our guides, if you would like to share the setup on your bike please send your installation pics to technical@scottoiler.com.

---

1. Go to vSystem Installation
2. Go to xSystem Installation
3. Go to eSystem Installation

---

vSystem Installation

Step 1 - Find a vacuum source

There is a vacuum pipe from the throttle body to the EVAP purge valve. You can read more about the EVAP System and how to identify the correct vacuum pipe here. Cut this pipe and insert the 4mm Tee connector, and push the vacuum damper elbow onto the third leg of the tee.

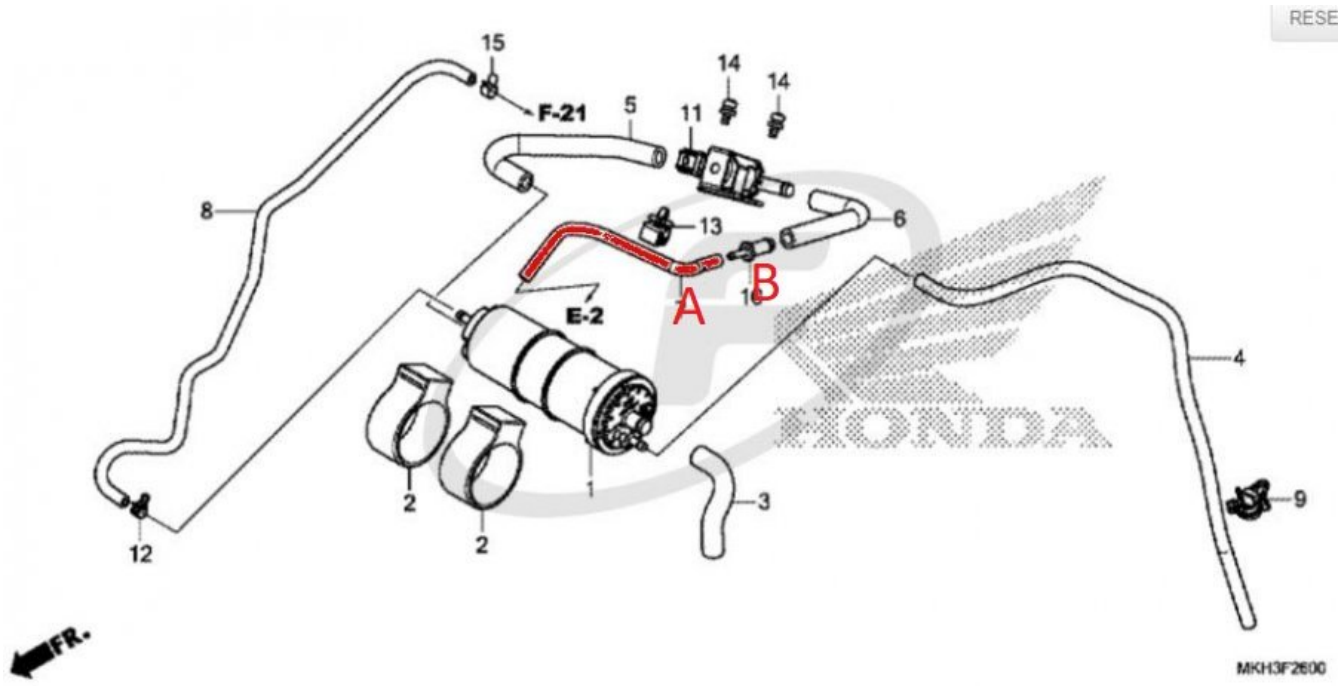

Add a short piece of pipe with a T-Piece to join original connection (point A end B) being very careful not to excessively bend the original pipe.



Step 2 - Find a place for the reservoir

The reservoir can be mounted to the frame. The more vertical the reservoir is mounted the better. Avoid positioning the reservoir completely horizontally, as this will limit the available range. Remember to avoid exhaust and engine components. For further information, see our easy step installation guide – Reservoir Positions.



Step 3 - Mount the dispenser and connect the system

The Dispenser assembly can be secured on the chain guard bolt using the small dispenser plate and clip. The delivery tubing can be routed along the swing arm using self - adhesive cable clips. See our easy step installation guide - Dispenser Positioning. The nib should lightly touch the face of the rear sprocket, with the slash cut facing outwards.


Flat surface may need trimmed





Step 4 - Fill, prime and set up your vSystem

Once fitted, fill and prime the system and set the adjuster knob to 'prime'. Start the engine and turn the adjuster knob until a flow of between 1 and 2 drops per minute is achieved. Check the condition of your chain after a ride, and then adjust as required.

For best results clean your chain before fitting the Scottoiler using paraffin or similar. Then lightly oil the chain from the bottle using a rag or a brush, this

allows the oil from the Scottoiler to reach both sides of the chain. 1 to 2 drops per minute will maintain this film of oil on the chain.

---

xSystem Installation

Step 1 - Find a place for the reservoir

The xSystem reservoir unit can be mounted in various locations on your motorcycle such as frame tubes or under the seat. The reservoir must be at least at a a slight angle with the outlet facing downwards.



Step 2 - Connect to the battery

The xSystem must be wired directly to the battery. Attach the red wire to the +ve terminal and attach the black wire to the -ve terminal.

Slightly loosen the battery terminal screws to slip in the spade connectors.

Step 3 - Mount the dispenser on your rear sprocket

The Dispenser assembly can be secured on the chain guard bolt using the small dispenser plate and clip. The delivery tubing can be routed along the swing arm using self - adhesive cable clips. See our easy step installation guide - Dispenser Positioning. The nib should lightly touch the face of the rear sprocket, with the slash cut facing outwards.







Step 4 - Fill, prime and install the check valve

Identify a desired location for the check valve in the delivery line. The location of the check valve can be anywhere along the delivery line and should

be protected from outside elements. Fill the reservoir and prime the pump until oil reaches your desired check valve location. Cut and insert the check valve with the arrow facing in the direction of the oil flow. Repeat priming the pump until oil reaches the sprocket.

Step 5 - Set the flowrate

To turn the system on, press and hold the on/off button (at the bottom) until the LEDs light from the bottom , upwards. It will settle on the chosen flow rate.

To turn off, again, hold the on/off button and the LEDs will light up and turn off, one by one, downwards.

To increase the flow rate, make sure it’s switched on and press the upwards pointing arrow and the LED will move one position higher.

To reduce the flow rate, press the downward pointing arrow.

Set the flow rate on the middle section and adjust if required up/down depending on your riding conditions.

The xSystem will automatically switch on/off and no manual activation is necessary. You can manually turn the system on/off if you transport the motorcycle on a ferry or trailer.

eSystem Installation

Step 1 - Find a place for the display

The Display Bracket (Part 5) can be rotated through 360° to give 4 mounting options and can also be flipped to provide 4 further options. The bracket can be secured to any M5/M6 bolt e.g. brake or clutch lever, brake cylinder or fairing mountings, in some cases you might need to trim the supplied bolt. It is possible to bend the bracket to shape, do so before fitting the Display Unit, part 1, to prevent damage to the unit. Alternatively, the sticky fasteners (Part 4) can be used to securely fasten the Display Unit to any flat surface e.g. the fork yokes.



Step 2 - Find a space for the reservoir

The reservoir can be mounted to the frame. The more vertical the reservoir is mounted the better. Avoid positioning the reservoir completely horizontally, as this will limit the available range. Remember to avoid exhaust and engine components. For further information, see our easy step installation guide – Reservoir Positions.



Step 3 - Mount dispenser on your rear sprocket

The Dispenser assembly can be secured on the chain guard bolt using the small dispenser plate and clip. The delivery tubing can be routed along the swing arm using self - adhesive cable clips. See our easy step installation guide - Dispenser Positioning. The nib should lightly touch the face of the rear sprocket, with the slash cut facing outwards.


Flat surface may need trimmed





Step 4 - Connect system to your battery

The eSystem must be wired directly to the battery. Attach the red wire to the +ve terminal and attach the black wire to the -ve terminal.

If you want to learn more about the eSystem Battery Connection and Power

Consumption please click here.



Step 5 - Fill, prime, and set up your new eSystem

Once fitted, fill the REP and prime the pump. Attach the delivery tubing and prime until the oil reaches the point where you want to install the check valve. Stop the priming process and cut and insert the check valve at the chosen position. Continue priming the system until oil reaches the sprocket.

For further information you can also watch our installation video that shows the setup steps. How to fill and prime my eSystem?

Set the flow rate, using the ’Driving Screen’ on the Display Unit, to 60-70 seconds per drop (s/dp), check the condition of your chain after a ride, and adjust as required.

Online URL: https://marketingengineer.de/article/x-adv-2017-on-526.html